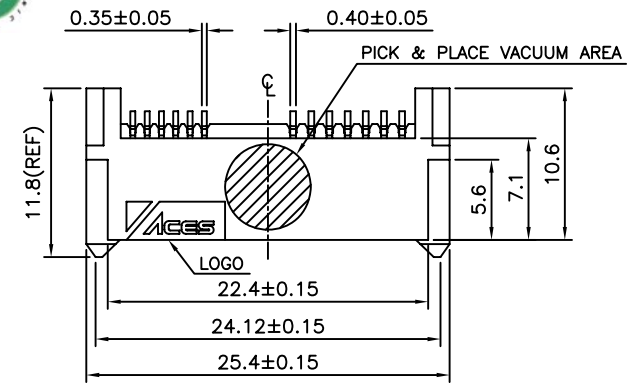

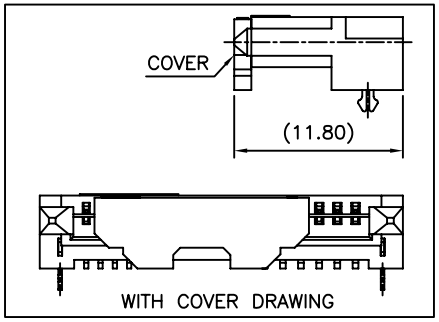

NOTES:
1. MATERIAL:
   1.1 HOUSING: HALOGEN FREE PLASTIC,UL94V-0; COLOR:BLACK.
   1.2 CONTACT: PHOSPHOR BRONZE
   1.3 BOARD LOCK: BRASS
2. FINISH:
   2.1 CONTACT:
      PLATING 50u"MIN. NICKEL PLATING OVERALL
      P: 100u" MIN MATT TIN PLATING ON SOLDER TAIL
         GOLD FLASH(1~3u") PLATING ON CONTACT AREA
      S: 100u" MIN MATT TIN PLATING ON SOLDER TAIL
         15u" MIN. GOLD PLATING ON CONTACT AREA
   2.2 BOARD LOCK:
      100u" MIN. TIN PLATING ON SOLDER TAILS,
      50u" MIN. NICKEL UNDERPLATING OVERALL.
3. REFLOW SOLDER CAPABLE TO 260° C
   PER ACES SPEC.
4. SPEC. PLS. REFER TO PS-50861-XXXXX-XXX
5. PACKAGE PLS. REFER TO 91920-XXXXX-TRP
6. PART NUMBER
   50861-XXX X X-XXX

NO.	HOUSING COLOR	Halogen Free
001	BLACK	Y

NO OF CKT
013 : 13PIN
PACKING
0:TAPE & REEL WITHOUT COVER
7:TAPE & REEL WITH COVER
PLATING
⚠ P: GOLD FLASH ON CONTACT FOR MATT TIN
S: 15u" GOLD ON CONTACT FOR MATT TIN

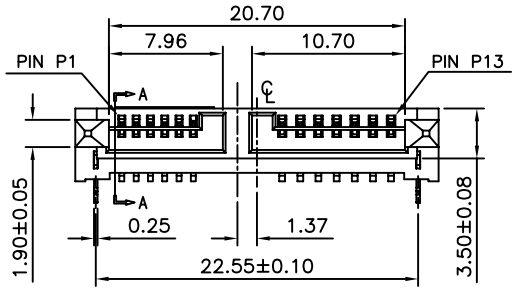

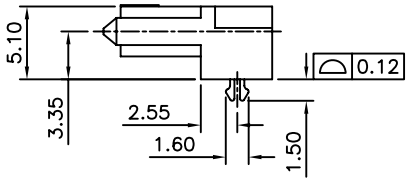

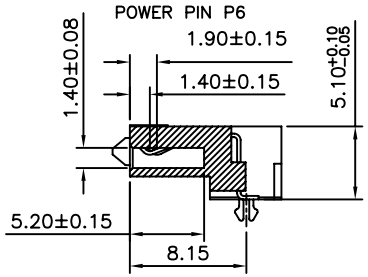

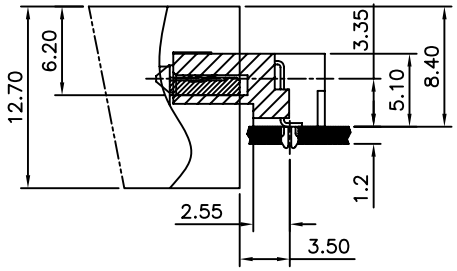

MATING DRAWING

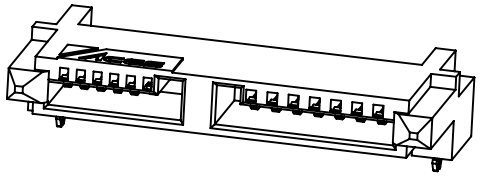

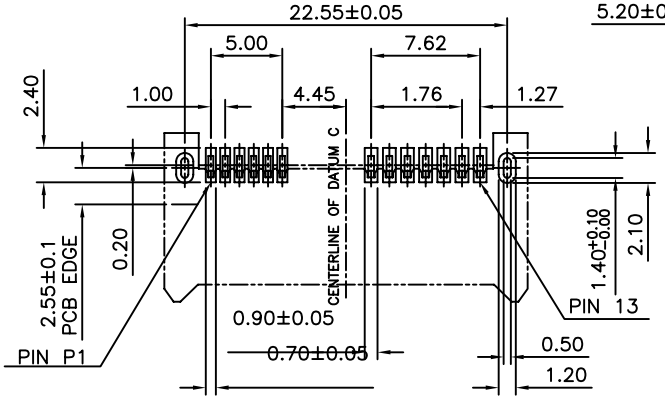

RECOMMENDED PCB LAYOUT
GENERAL TOLERANCE ±0.05 THICKNESS: 1.2mm

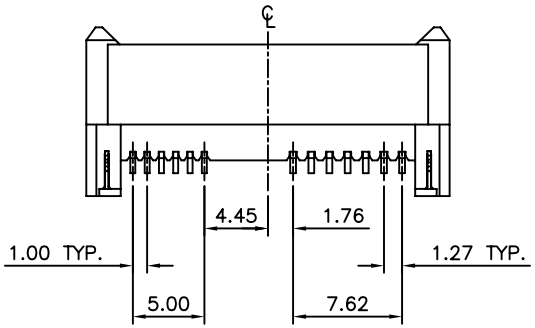

REV	修訂說明 REVISION DESCRIPTION	日期 DATE	申請人 SIGNATURE
A	修改電鍍新電說明(ECN-0909130)	'09/1/15	Ring
0	FOR APP970142新增無鹵料號	'08/10/15	Ring

一般公差 TOLERANCES
X. ±0.5 .XX ±0.15
.X ±0.25 .XXX ±0.1
ANGLES ±2°

檢驗尺寸標示
SYMBOLS CR MA INDICATE CLASSIFICATION DIMENSION
CR MARK IS CRITICAL DIM.
MA MARK IS MAJOR DIM.

表面處理 (FINISH)

宏致電子股份有限公司
Aces Electronic Co.,Ltd.

品名 (TITLE) ODD SATA CONN. RECEPTACLE SMT R/A RVS TYPE
圖號 (DWG.NO) 50861-XXXXX-XXX
比例 (SCALE) 2:1
單位 (UNITS) mm
製圖 (DR) 08'/10/15 Ring
審核 (CHKD) SAM
核准 (APPD) JASON
張數 (SHEET) 1 OF 1
SIZE A4
REV A